Product Manual

TP-P12



I.Overview

1.1 Application Scenarios

This high-voltage DC power supply is a custom-designed unit featuring compact size, light weight, high efficiency, and built-in fan cooling. With a maximum operational efficiency ≥97%, the power module adopts an aluminum housing for a lightweight, sleek appearance and waterproof design. It can serve as a replacement for imported high-voltage DC modules.

1. Product Features

- **DC-DC isolated power converter: accepts 800-1000 VDC input and provides 59 VDC rated output (54-59 VDC range), with 11.8 kW rated output in the 12 kW class.**
- **High power density, compact size, and lightweight design.**
- **Designed to meet power supply reliability requirements:** Equipped with input over-voltage/under-voltage protection, output over-voltage protection, current limiting, short-circuit, and over-temperature protection.

2. Product Photos

3. Main Specifications

Input Voltage Range	Rated Output Voltage	Rated Output Power	Efficiency	Voltage Regulation Accuracy	Output Ripple & Noise
800～1000Vdc	59±0.5Vdc	11.8 kW	≥97%	≤±1%	≤±2%Vo

II. Environmental Conditions

NO.	Item	Technical Specifications	Unit	Remarks
1	Operating Temperature	-40℃～+55℃	℃	

2	Storage Temperature	-40℃～+80℃	℃	/
3	Relative Humidity	≤95	%	No condensation （40℃±2℃）
4	Altitude	0-3000	m	
5	Atmospheric Pressure	76～106	Kpa	/
6	Cooling Method	equipped with self-contained air cooling	/	/

III.Electrical Specifications

1	Input Characteristics			
No.	**Item**	**Technical Requirement**	**Unit**	**Remarks**
1.1	Rated Input Voltage	950	Vdc	
1.2	Input Voltage Range	800～1000	Vdc	
1.3	Maximum Input Current	15	A	Vin=800Vdc, full load
2	Output Characteristics			
No.	**Item**	**Technical Requirement**	**Unit**	**Remarks**
2.1	Rated Output Voltage	59	Vdc	/
2.2	Output Voltage Range	54～59	Vdc	
2.3	Rated Output Current	200	A	/
2.4	Rated Output Power	11.8	KW	/

2.5	Efficiency	≥97	%	Vin=950Vdc, at half load
2.6	Voltage Regulation Accuracy	±1	%	/
2.7	Line Regulation	±1	%	/
2.8	Load Regulation	±1	%	/
2.9	Output Ripple & Noise	±2	%/Vo	Bandwidth limited to 20MHz; tested with 10uF electrolytic capacitor and 0.1uF film capacitor in parallel at rated load
2.10	Temperature Coefficient	±0.02	%/℃	/
2.11	Output Rise Time	≤200	ms	/
2.12	Startup Delay Time	≤5	S	At rated input
2.13	Power On/Off Overshoot	△V：≤±5	%	/
2.14	Dynamic Response Overshoot	△V：≤±5	%	/
2.15	Dynamic Recovery Time	≤2	ms	Load step: 25%→50%→25% or 50%→75%→50% change, at 25°C
3	Protection Features			
No.	**Item**	**Technical Requirement**	**Unit**	**Remarks**

3.1	Input Undervoltage Protection	740～780	Vdc	Hysteresis >15V
3.2	Input Undervoltage Recovery	780～800	Vdc	
3.3	Input Overvoltage Protection	1030～1070	Vdc	Hysteresis >15V
3.4	Input Overvoltage Recovery	1030～1000	Vdc	
3.5	Reverse Polarity Protection	No damage when reversed		Input 800Vdc reversed
3.6	Output Overvoltage Protection	63～65	Vdc	Auto-recovery
3.7	Output Overcurrent Protection	215～230	A	Auto-recovery
3.8	Output Short Circuit Protection	Supported		Auto-recovery
3.9	Over-temperature Protection	70	℃	Case temperature
3.10	Over-temperature Recovery	60	℃	

IV.Safety Features

No.	Item		Test Conditions	Remarks
1	Dielectric Strength	Input to Output	2500Vdc/10mA/1min	No flashover or breakdown
		Input to Enclosure	2500Vdc/10mA/1min	
		Output to Enclosure	500Vdc/10mA/1min	
2	Insulation Resistance	Input to Output	≥10MΩ@ 500Vdc	Tested under normal atmospheric pressure, relative humidity 90%, at DC500V
		Input to Enclosure	≥10MΩ@ 500Vdc	
		Output to Enclosure	≥10MΩ@ 500Vdc	

V.Other Characteristics

1.1 Flame Retardant Requirements:

- The flame retardant rating of PCBs used in the system shall comply with the V-0 requirements specified in GB4943.1-2011.
- The flame retardant rating of insulated cables shall meet the requirements specified in GB/T 18380.12-2008.
- Other insulating materials shall comply with the V-1 requirements specified in GB4943.1-2011.

1.2 System Noise:

- The system noise shall not exceed 55 dB(A).

1.3 System Reliability:

- MTBF ≥ 100 K hours.
- Test conditions: 25°C, rated input, full load output, estimated by MIL-HDBK-217F Notice 2 stress analysis method.

1.4 Protection Rating:

- The protection level shall meet IP65 requirements.
- Water accumulation on the top surface of the power supply enclosure is not permitted.

1.5 Triple Protection (moisture-proof, mildew-proof, salt-spray resistant):

- Printed circuit boards, connectors, and other circuits inside the product shall have moisture-proof, mildew-proof, and salt-spray resistant treatments.
- The salt-spray resistance shall meet the requirements of Table 9 in GB/T 4797.6, ensuring normal operation in outdoor humid and saline environments.

VI. Product Label & Weight

1、Label Requirements:

2、Net Weight:

3Kg

VII. Mechanical Dimensions & Connector Definition

1. Product Installation Dimension Diagram

Parameter	Specification
Dimensions	277mm*202mm*70mm

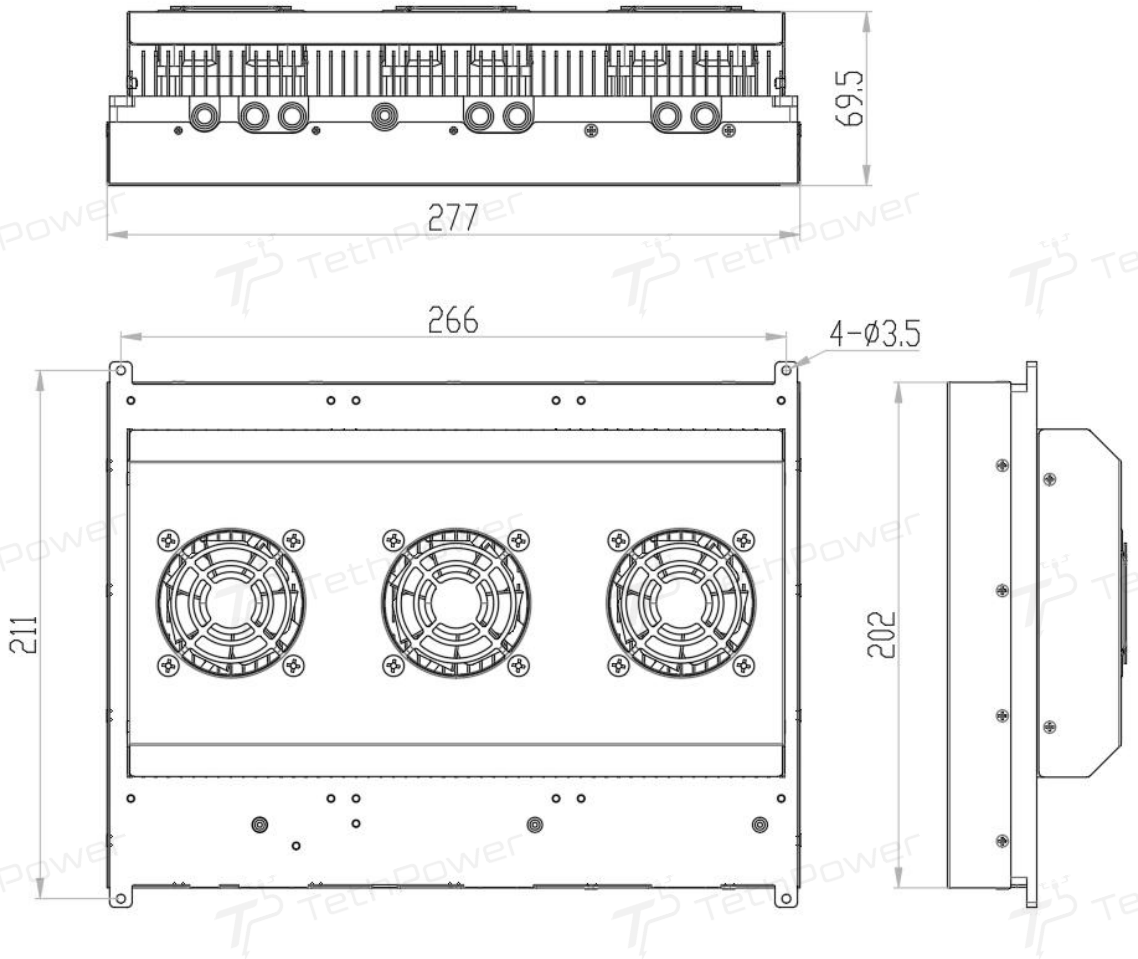

1. Terminal Definitions：

Terminal Reference	Function Name	Definition	Remarks
XT60	High Voltage DC Input	VIN+	High voltage input positive
		VIN-	High voltage input negative
QS10P-L	Low Voltage DC Output	OUT+	Low voltage output positive
		OUT-	Low voltage output negative

VIII. Packaging, Transportation, and Storage

1.1 Packaging

The packaging box shall display the product name, model, manufacturer's mark, quality department's inspection certificate, and manufacturing date. An accessory list shall be included inside the packaging.

1.2 Transportation

The product must be transported in a sturdy packaging box. The outside of the box shall comply with applicable national standards and bear markings such as “Handle with Care” and “Keep Dry.” The packaged product may be transported by any means. During transport, the product must be protected from direct exposure to rain and snow as well as mechanical impacts.

1.3 Storage

When not in use, the product should be stored in its packaging inside a warehouse with ambient temperature of -10 to 40°C and relative humidity not exceeding 80%. The warehouse shall be free of harmful gases, flammable, explosive, and corrosive chemicals, and there shall be no strong mechanical vibration, impact, or intense magnetic fields. The packaging should be kept at least 20 cm above the floor and at least 50 cm away from walls, heat sources, windows, or air inlets. Under these specified conditions, the storage period is generally up to 2 years. After 2 years, re-inspection is required before use.

IX. Safety Precautions

- If the device’s safety protection is damaged, the equipment must be stopped and serviced according to maintenance guidelines.
- When moving the equipment from a cold to a warm environment, condensation may occur, posing leakage hazards; strict grounding is required. Only qualified personnel shall connect the equipment to the power supply.
- After power-off, wait at least five minutes to allow capacitors to fully discharge before performing any maintenance.
- Safety awareness: do not touch areas marked with safety or high voltage warnings to avoid electric shock or burns.
- X. Referenced Standards and Specifications
- GB/T 2423.1-2001: Environmental testing for electric and electronic products – Part 2: Test A – Low temperature
- GB/T 2423.2-2001: Part 2: Test B – High temperature
- GB/T 2423.3-1993: Part 2: Test Ca – Constant damp heat

- GB/T 2423.4-1993: Part 2: Test Db – Cyclic damp heat
- GB/T 2423.5-1995: Part 2: Test Ea – Shock
- GB/T 2423.6-1995: Part 2: Test Eb – Bump
- GB/T 2423.8-1995: Part 2: Test Ed – Free fall
- GB/T 2423.10-1995: Part 2: Test Fc – Vibration (sinusoidal)
- GB/T 2423.11-1997: Part 2: Test Fd – Broad-band random vibration
- GB/T 2423.22-2002: Part 2: Test N – Temperature changes
- GB/T 14508-93: Mechanical environmental conditions for road freight transportation
- EN55022:1998: Information technology equipment – Radio disturbance characteristics – Limits and methods of measurement
- EN55024:1998: Information technology equipment – Immunity characteristics – Limits and methods of measurement
- CEI IEC 61000-4 series: EMC testing and measurement techniques, covering electrostatic discharge, RF field immunity, electrical fast transients, surges, conducted disturbances, power frequency magnetic field, voltage dips/interruptions, and DC port immunity
- IEC 61000-3-2:2001: EMC limits – Harmonic current emissions (≤16A per phase)
- IEC 61000-3-3:1994: EMC limits – Voltage fluctuations and flicker (≤16A)
- GB4943-2001: Safety of information technology equipment
- YD/T 282-2000: General reliability test methods for communication equipment
- GB/T 13722-92: Technical requirements and test methods for mobile communication power supplies
- YD/T 732-95: Test methods for DC–DC converters used in communication
- YD/T 731-2002: High-frequency switch-mode rectifiers for communication
- GB14287.1-2005: Electrical fire monitoring systems – Part 1: Electrical fire monitoring equipment