Product Manual

TP-P12-100050



I.Overview

1.1 Application Scenarios

This high-voltage DC power supply is a custom-designed unit featuring compact size, light weight, high efficiency, and built-in fan cooling. With a conversion efficiency of 95%, the power module adopts an aluminum housing for a lightweight, sleek appearance and IP54 enclosure protection. It can serve as a replacement for imported high-voltage DC modules.

1. Product Features

- **DC-DC isolated power converter:** Converts input 1000V DC into isolated 50V DC output, delivering a rated power of 12kW.
- **High power density, compact size, and lightweight design.**
- **Designed to meet power supply reliability requirements:** Equipped with input over-voltage/under-voltage protection, output over-voltage protection, current limiting, short-circuit, and over-temperature protection.

2. Product Photos

3. Main Specifications

Input voltage range	Rated output voltage	Rated output power	Efficiency	Voltage regulation accuracy	Output ripple and noise
900～1000Vdc	50±0.5Vdc	12KW	95%	≤±1%	≤±2%Vo

II. Environmental Conditions

NO.	Item	Technical Specifications	Unit	Remarks

1	Operating Temperature	-40°C～+55°C	°C	
2	Storage Temperature	-40°C～+80°C	°C	/
3	Relative Humidity	≤95	%	No condensation（40°C±2°C）
4	Altitude	0-3000	m	
5	Atmospheric Pressure	76～106	Kpa	/
6	Cooling Method	equipped with self-contained air cooling	/	/

III.Electrical Specifications

1	**Input characteristics**			
NO.	**Program**	**Technical requirements**	**Unit**	**Remarks**
1.1	Rated input voltage	950	Vdc	
1.2	Input voltage range	900～1000	Vdc	
1.3	Maximum input current	16	A	Vin=900Vdc，Po=12KW
2	**Output characteristics**			
NO.	**Program**	**Technical requirements**	**Unit**	**Remarks**
2.1	Output rated voltage	50	Vdc	/
2.2	Output voltage range	49.5～50.5	Vdc	
2.3	Rated output current	240	A	/
2.4	Rated output power	12	KW	/
2.5	Output efficiency	95	%	Vin=950Vdc，Half load
2.6	Voltage regulation accuracy	±1	%	/
2.7	Source regulation rate	±1	%	/
2.8	Load regulation rate	±1	%	/

2.9	Output ripple and noise	±2	%/Vo	The bandwidth is limited to 20MHz. Connect a 10uF electrolytic capacitor and a 0.1uF film capacitor at the test terminal;Rated load
2.10	Temperature coefficient	±0.02	%/°C	/
2.11	Output rise time	≤200	ms	/
2.12	Output delay at startup	≤5	S	Rated input
2.13	Over - shoot amplitude during startup and shutdown	△V：≤±5	%	/
2.14	Dynamic response over - shoot	△V：≤±5	%	/
2.15	Dynamic response recovery time	≤2	ms	25%～50%～25% or 50%～75%～50% Load variation，25°C
3	**Protection Characteristics**			
NO.	**Program**	**Technical requirements**	**Unit**	**Remarks**
3.1	Input under - voltage protection	730～770	Vdc	The hysteresis is greater than 15V
3.2	Input under - voltage recovery	780～800	Vdc	
3.3	Input over - voltage protection	1030～1070	Vdc	The hysteresis is greater than 15V
3.4	Input over - voltage recovery	1030～1000	Vdc	
3.5	Output over - voltage protection	52～55	Vdc	It can self-recover
3.7	Output over - current protection	255～300	A	It can self-recover

3.8	Output short - circuit protection	It can be short-circuited for a long time		It can self-recover
3.9	Over-temperature protection	70	°C	Shell temperature
3.10	Over-temperature recovery	60	°C	

IV.Safety Features

No.	Item		Test Conditions	Remarks
1	Dielectric Strength	Input to Output	2500Vdc/10mA/1min	No arcing, breakdown
		Input to Enclosure	2500Vdc/10mA/1min	
		Output to Enclosure	500Vdc/10mA/1min	
2	Insulation Resistance	Input to Output	≥10MΩ@ 500Vdc	Tested under normal atmospheric pressure, relative humidity 90%, at DC500V
		Input to Enclosure	≥10MΩ@ 500Vdc	
		Output to Enclosure	≥10MΩ@ 500Vdc	

V.Other Characteristics

1.1 Flame Retardant Requirements:

- The flame retardant rating of PCBs used in the system shall comply with the V-0 requirements specified in GB4943.1-2011.
- The flame retardant rating of insulated cables shall meet the requirements specified in GB/T 18380.12-2008.
- Other insulating materials shall comply with the V-1 requirements specified in GB4943.1-2011.

1.2 System Noise:

- The system noise shall not exceed 55 dB(A).

1.3 System Reliability:

- MTBF ≥ 100 K hours.
- Test conditions: 25°C, rated input, full load output, estimated by MIL-HDBK-217F Notice 2 stress analysis method.

1.4 Protection Rating:

- The protection level shall meet IP54 requirements.
- Water accumulation on the top surface of the power supply enclosure is not permitted.

1.5 Triple Protection (moisture-proof, mildew-proof, salt-spray resistant):

- Printed circuit boards, connectors, and other circuits inside the product shall have moisture-proof, mildew-proof, and salt-spray resistant treatments.
- The salt-spray resistance shall meet the requirements of Table 9 in GB/T 4797.6, ensuring normal operation in outdoor humid and saline environments.

VI. Product Weight

Net Weight:

3KG

VII. Mechanical Dimensions & Connector Definition

1. Product Installation Dimension Diagram

Parameter	Specification
Dimensions	277mm*202mm*70mm

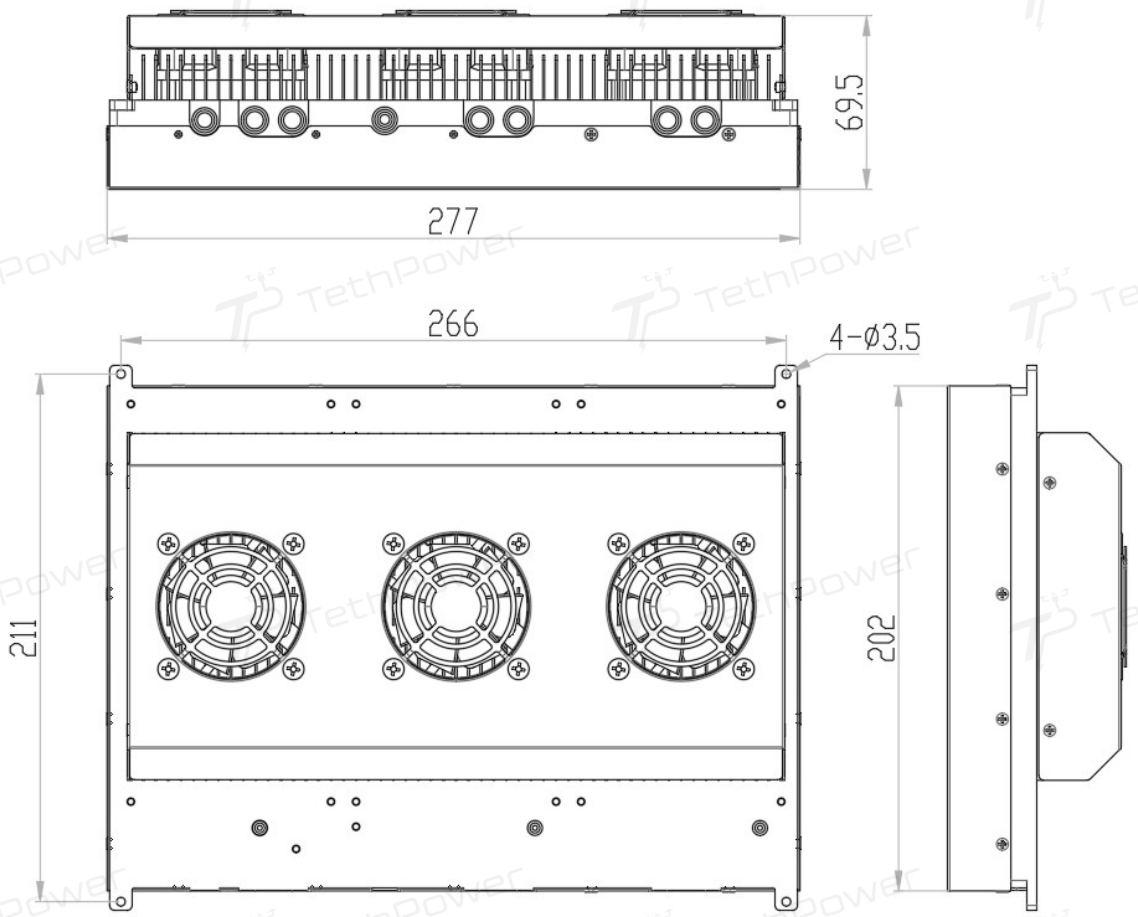

1. Terminal Definitions：

Terminal Location Number	Function Name	Definition	Annotation
XT60	DC (Direct Current) Input	VIN+	Positive Pole of High Voltage Input
		VIN-	Negative Pole of High Voltage Input
XT150(2+4)	DC (Direct Current) Output 1	OUT+	Positive of Low Voltage Output
		OUT-	Negative of Low Voltage Output
		CSB+	Positive of Current Sharing Bus
		CSB-	Negative of Current Sharing Bus

VIII. Packaging, Transportation, and Storage

1.1 Packaging

The packaging box shall display the product name, model, manufacturer's mark, quality department's inspection certificate, and manufacturing date. An accessory list shall be included inside the packaging.

1.2 Transportation

The product must be transported in a sturdy packaging box. The outside of the box shall comply with applicable national standards and bear markings such as “Handle with Care” and “Keep Dry.” The packaged product may be transported by any means. During transport, the product must be protected from direct exposure to rain and snow as well as mechanical impacts.

1.3 Storage

When not in use, the product should be stored in its packaging inside a warehouse with ambient temperature of -10 to 40°C and relative humidity not exceeding 80%. The warehouse shall be free of harmful gases, flammable, explosive, and corrosive chemicals, and there shall be no strong mechanical vibration, impact, or intense magnetic fields. The packaging should be kept at least 20 cm above the floor and at least 50 cm away from walls, heat sources, windows, or air inlets. Under these specified conditions, the storage period is generally up to 2 years. After 2 years, re-inspection is required before use.

IX. Safety Precautions

- If the device’s safety protection is damaged, the equipment must be stopped and serviced according to maintenance guidelines.
- When moving the equipment from a cold to a warm environment, condensation may occur, posing leakage hazards; strict grounding is required. Only qualified personnel shall connect the equipment to the power supply.
- After power-off, wait at least five minutes to allow capacitors to fully discharge before performing any maintenance.
- Safety awareness: do not touch areas marked with safety or high voltage warnings to avoid electric shock or burns.
- X. Referenced Standards and Specifications
- GB/T 2423.1-2001: Environmental testing for electric and electronic products – Part 2: Test A – Low temperature
- GB/T 2423.2-2001: Part 2: Test B – High temperature
- GB/T 2423.3-1993: Part 2: Test Ca – Constant damp heat
- GB/T 2423.4-1993: Part 2: Test Db – Cyclic damp heat

- GB/T 2423.5-1995: Part 2: Test Ea – Shock
- GB/T 2423.6-1995: Part 2: Test Eb – Bump
- GB/T 2423.8-1995: Part 2: Test Ed – Free fall
- GB/T 2423.10-1995: Part 2: Test Fc – Vibration (sinusoidal)
- GB/T 2423.11-1997: Part 2: Test Fd – Broad-band random vibration
- GB/T 2423.22-2002: Part 2: Test N – Temperature changes
- GB/T 14508-93: Mechanical environmental conditions for road freight transportation
- EN55022:1998: Information technology equipment – Radio disturbance characteristics – Limits and methods of measurement
- EN55024:1998: Information technology equipment – Immunity characteristics – Limits and methods of measurement
- CEI IEC 61000-4 series: EMC testing and measurement techniques, covering electrostatic discharge, RF field immunity, electrical fast transients, surges, conducted disturbances, power frequency magnetic field, voltage dips/interruptions, and DC port immunity
- IEC 61000-3-2:2001: EMC limits – Harmonic current emissions (≤16A per phase)
- IEC 61000-3-3:1994: EMC limits – Voltage fluctuations and flicker (≤16A)
- GB4943-2001: Safety of information technology equipment
- YD/T 282-2000: General reliability test methods for communication equipment
- GB/T 13722-92: Technical requirements and test methods for mobile communication power supplies
- YD/T 732-95: Test methods for DC–DC converters used in communication
- YD/T 731-2002: High-frequency switch-mode rectifiers for communication
- GB14287.1-2005: Electrical fire monitoring systems – Part 1: Electrical fire monitoring equipment